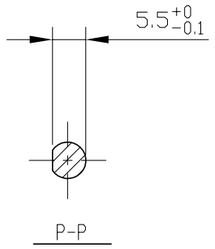

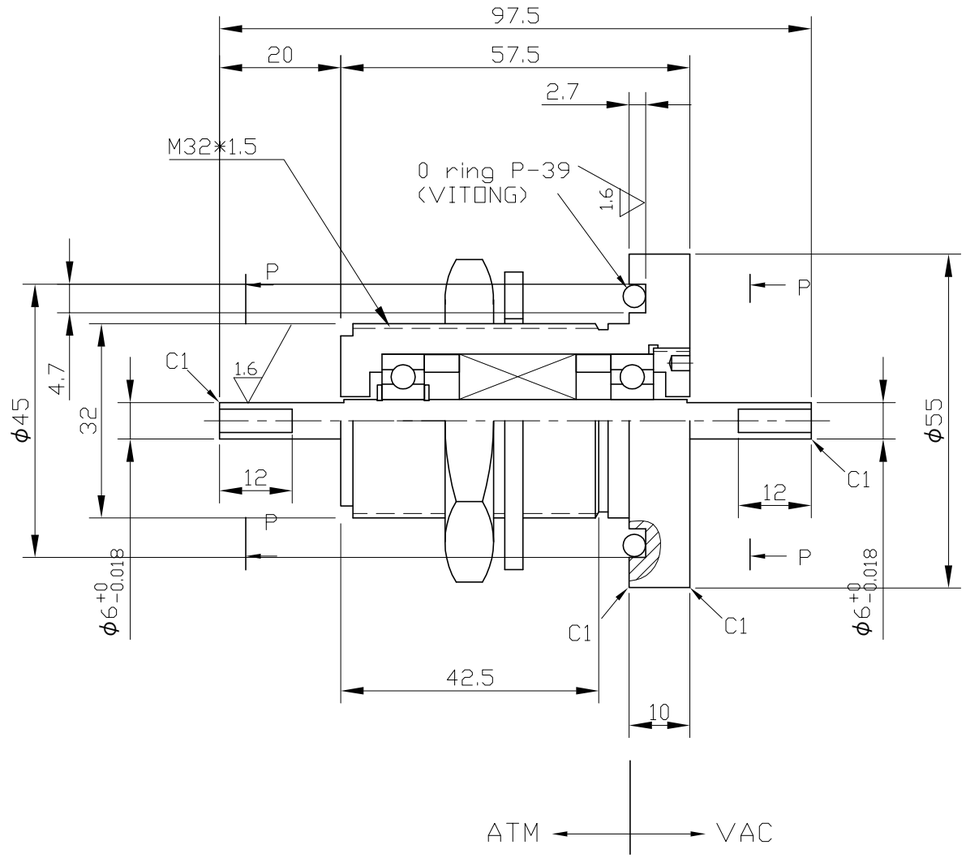

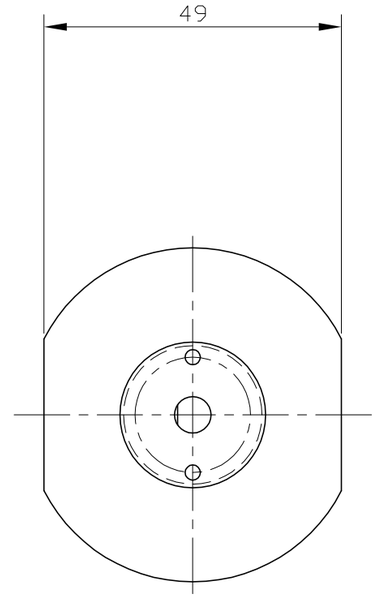

NOTES:

1.ROTARY SPEED: <18200RPM

2.VACUUM BASE: 10^{-8} Torr

3.VACUUM LEAK CHECK TO LESS THAN 10^{-12} Pa.M^3/sec HELUUM

4.DIFFERENTIAL PRESSURE: 1Kg/cm^2

5.TEMPERATURE: 0-80℃

5.GASES SEALED: INERT GASES

6.BEAR: 627(NSK)

UNRELEASED

PENDING CUSTOMER APPROVAL

Approved _____ Date _____

普通許容差			
加工種別 / 寸法区分	削り 一般	削り 穴間	プレス 一般
6以下	± 0.1	±0.15	± 0.5
6を越え 30 〃	± 0.2		
30 〃 120 〃	± 0.3	±0.2	± 0.7
120 〃 315 〃	± 0.5	±0.25	± 1.0
315 〃 1000 〃	± 0.8	±0.4	± 1.5
1000 〃 2000 〃	± 1.2	±0.6	± 2.0

	NUB	NUB	CONTENT	NAME

PREPARED	JUDY	3-1-01
CHECKED	KOBAYASHI	3-2-01
DATE		
ENGINER		
DATE		
MFC, ENG		
DATE		

6.3 1.6

MATL HOUSING SUS304
SHAFT SUS630

PROJECTION

FEEDTHROUGH

Model SNB006NN

P/N

SCALE 1/1

REV D

Ideal Vacuum Products